Survey on Network-on-Chip Architecture Implementation

S. Sariga*, C. Nandagopal
Department of Electronics and Communication Engineering, M.Kumarasmy College of Engineering, Karur, Tamil Nadu
***Corresponding author: E-Mail: sarigakumar@gmail.com**

ABSTRACT

Network on Chips (NOC) depends on the switch for unstable memory based plans. Effectively knob the many-to-one correspondence design, information approach to and from the steering authority are outlined in Network on Chip. The Argo and FALP techniques are utilized to enhance the execution and diminish the power, when contrasted with the customary round robin strategy. The Argo strategy and case move established Limited State Machine memory controller is intended for on-chip network and it is utilized to stay away from the blockage, which improve territory and capacity. Our trials on a genuine NOC sight and sound criterion demonstrate a vast lessening in capacity utilization and change in throughput when contrasted with actual arrangements.

KEY WORDS: Argo, FALP, Router, Network on Chip.

1. INTRODUCTION

Network on-Chip (NoCs) are key segments of the rising Frameworks on-Chip (SoCs). SoC has correspondence prerequisites as far as execution (dormancy and throughput) and number of interconnected parts and it develop in zone, multifaceted nature and usefulness. NoC acquainted with each correspondence combine inside the SoC, which reducing NoC inertness is essential for SoC execution. Organize on Chip essential part on account of processor units speaking with other processor units, nearby memory, shared memory or store squares and the dormancy may get to be distinctly crucial on account of ongoing SoCs. The capacity of an on-chip system is to convey messages from source hub to destination hub, and there are many plan other options to finish this occupation. Contingent upon the utilization prerequisites, how to pick a reasonable system design remains an open issue for research (Sundaravadivu and Bharathi, 2013). Here we examine the system estates that should be treated when conceiving a NoC engineering for particular utilization.

There are two noteworthy exchanging strategies: circuit exchanging and packet exchanging. Circuit exchanging builds up a connection amongst source and destination hub each of two for all intents and purposes or physically before a message is being exchanged. The connection is held until every one of the information are conveyed. The circuit exchanging are that there is no dispute lag amid message transmission and its conduct is more unsurprising, so circuit exchanging is generally utilized when Nature of Administration (QoS) is considered. It is the real favorable position of the circuit exchanging.

Then again, a for every bounce premise message change in the packet exchanging. With packet exchanging, messages are isolated into packets at the source hub and after that commissioned into a system. Packets move along a course in light of the directing calculation and cross through a progression of system hubs lastly touch base at the destination hub (Vijayprasath, 2015). Packets exchanging potential for giving concurrent information correspondence between many source-destination sets and it is used in the greater part of NoC stages.

Store and forward (SAF), virtual cut through (VCT), and wormhole exchanging are can be characterized into three classes. Wormhole exchanging desires a support size of one transmission unit called flit so that the territory cost of a switch can be kept low in light of the fact that the most usually utilized approach for a NoC design is wormhole exchanging. Interestingly, SAF and VCT require a cradle estimate identical to the entire packet which restricts their selection.

Literature Review: The accompanying segment comprises of Network on chip engineering plans to experience the study to get the better answer for NoC execution.

Network on Chip: The association structure of the switches is characterized the Network on Chip topologies. The Network on Chip has resource of bi-directional ports connected to different changes and to an IP center. Every switch has an alternate number of ports, contingent upon its location with respect to the furthest reaches of the network and mesh topology utilized as a part of this work. For instance, the focal switch has every one of the five ports characterized. In any case, every corner switch has just three ports.

The steering assignment situation in the utilization of mesh topologies. Manufacture torus, hypercube or comparative NoC topologies can likewise utilized by the Hermes switch. Be that as it may, building such topologies infers advance in switch associations and, all the more vitally, in the directing calculation. The switch modules impart dependably by unequivocal handshake signals, when the inertness to course the header and consequent flutters is expected in the part to the presumption and it's making the plan exceedingly measured and versatile. Idleness can be decreased utilizing one of two choices.

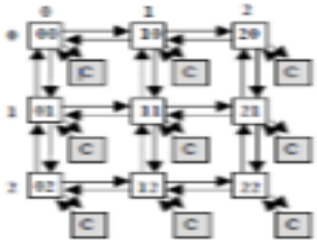

Fig.1. 3x3 Mesh NoC structure

Consolidating the arbiter and the router into a solitary module is comprised of, to start with, overlooking the particular plan suspicion. Elective switch structures are utilized by second, with dispersed arbiters. The created switch can build up just a single association at once. In any case, five associations are all the while took care of by a single switch. The working recurrence was at first 25MHz. Each switch has five ports and every port transmits 8-bit flutters. The main option prompts to higher execution. The second option gets execution from a huge.

Time-Triggered Communication in Networks-On-Chip (NOC): The customary time-triggered protocols typically work on the transport like frameworks. The availabilities are sorted out by the common correspondence media and all messages are isolated in the time space.

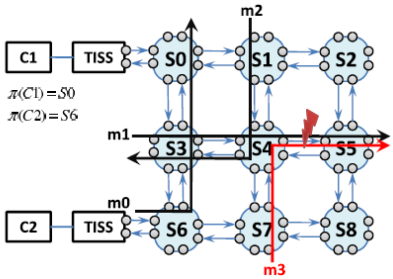

Fig.2. The TTNoC Architecture

Time-triggered protocols in Network on-Chip (NoC) explored by the scientists and expected the Time-triggered Network on-Chip (TTNoC) engineering (Palanivel Rajan & Sukanesh, 2013). TTNoC depends on a network of on-chip switches real preferred standpoint of TTNoC is the hazard to isolated messages in the dimensional space, when the system is universally parleyed in time, i.e. messages can have a similar schedule opening the length of their courses are non-covering. An arrangement of section Switches comprise with the TTNoC engineering. A switch offers four indistinguishable ports as delineated in Figure.2. Every port-to-port association comprises of one connection for each bearing.

A port can associate with addition switch or a Processing Element (PE) by means of the Trusted Interface Subsystem (TISS). The architect to execute diverse topologies with low exertion permitted in the brought together interface of switches and TISS. An arrangement of courses may exist together the length of no two courses, utilize a similar connection, e.g. in Figure.2, the messages m0, m1 and m2 can exist together though m3 crashes into m1. As indicated by the steering data accommodated in the message header. In that the switches don't know about the correspondence plan and simply toward the message from the info port to the yield port. The dormancy of sending is steady.

The payload of the message is the fundamental transportation entity in TTNoC, which is deteriorated into an arrangement of settled size flutters. A bounce is taken care of by an alteration in one framework clock revolution. The tunic is universally refereed utilizing TDMA. The granularity of the TDMA spaces is known as a full scale tick. A full scale tick is a several of the framework clock cycle, i.e., numerous dances can be sent in one space. The full scale tick term is limited to be a negative force of a physical second by plan. The vacancies are designated statically to every correspondence substance and the data is put away in each TISS. The TISS abstruse the points of interest of correspondence far from the utilization side. The TISSs are harmonized in full scale tick, i.e. all correspondence exercises are adjusted to the TDMA spaces. In the rest of the paper, large scale tick is utilized as the fundamental unit of time.

NOC Services: The many-sided quality of outlining chips with billions of transistors is overseen by the decoupling calculation from correspondence is a key fixing, since it permits the IP modules and the annex to be composed autonomously (Palanivel Rajan, 2012). The network benefits in NoC, this decoupling is accomplished by the position in the vehicle. At the vehicle level, the offered administrations are end to end between imparting IP modules, concealing, in this way, the system internals, for example, topology, steering plan, and so forth. In reverse similarity with existing conventions, for example, AXI or DTL, is accomplished by utilizing a model in view of exchanges. Bosses and slaves are two sorts of IP modules in an exchange based model. Experts start exchanges by issuing demands, which can be further part in charges, and compose information. The slave to the ace to arrival information or an affirmation of the exchange electrocution issued a reaction. Channel usage is

offered in the message requesting. Inside a channel, messages are packetized and sent By the NI all together of their certificate from the IP. The bundles in a channel are constrained on a similar way (Palanivel Rajan, 2010).

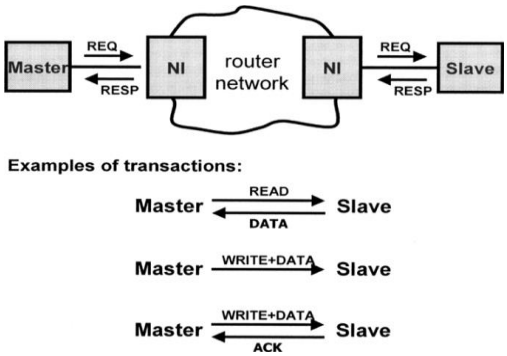

Fig.3. Transaction model

Throughput certifications are given by the quantity of openings saved for an association. The quantity of switches, information goes to achieve its goal and the inertness bound is given by the holding up time until the saved space arrives. Protocol stacks that are utilized as a part of systems to execute diverse correspondence administrations require an extra cost contrasted with buses (Palanivel Rajan & Sukanesh, 2012). To deal with the multifaceted nature of systems so the convention stacks are important in systems and to offer separated administrations. The weight to keep the convention stack little is higher on a chip than off the hip, on the grounds that the measure of the IP modules joined to the nose is generally little. Abusing the on-chip qualities are diminished the convention stack for NoC. In Ethereal NoC equipment execution used to upgrade the execution and limit the cost of the convention stack, as opposed to in programming.

A Time-Predictable Memory Network-On-Chip: A time predictable memory network on chip is created in the T-Peak extend (Palanivel Rajan, 2014). A few processor centers, the Patmos processors, are associated with double NoCs: (a) a center NoC for message going amid processor-neighborhood scratchpad recollections, and (b) a memory NoC, the concentration of this cardboard interfaces all processor centers to the common, outside memory by means of the memory authority (Palanivel Rajan & Sheik Davood, 2015). The utilization TDM planning from end to end, to such an extent that read or compose exchanges almost the mutual memory are transmitted from the starting processor center to the memory with no dynamic mediation or buffering and it is a principle thought of the displayed outline. Just the processor nearby recollections support any information. By infusing exchanges, as per a worldwide calendar, they can be proliferated in a pipelined design even without stream control. The succession of similarly estimated read or compose exchanges towards the memory are characterized in the TDM spaces and the TDM plan. The utilization of TDM results in both a basic equipment usage and a clear WCET examination and contrasted with executions that source rate control and element mediation. Besides, executing this worldwide TDM plan conveyed at the processor centers brings about appropriated mediation that scales well with expanded number of processor centers. We consider pipelining in the outline for contrasting with other TDM memory judges and record for the pipeline delays in the planning parameters.

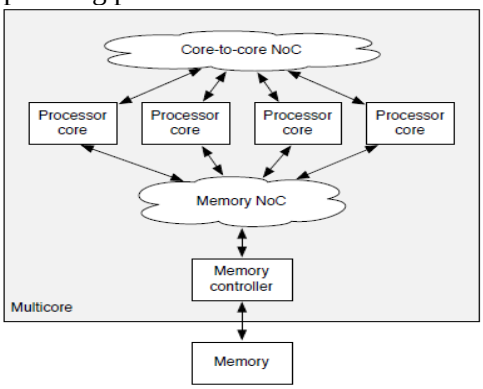

Fig.4. Time Predictable memory

For the incorporated TDM arbiter, the nearby TDM discretion controlled by a limited state machine. The FSM will exchange the memory get to demand of the relating hub in the memory tree, when the empower flag is stated (Palanivel Rajan, 2015). The FSM has just three states: sit still, read, and compose. The arbitration is isolated into N nearby referees, for the dispersed TDM arbiter. Every neighborhood referee has a counter for the TDM space checking. The yields of every single neighborhood judge are encouraged to a tree of OR doors and into pipeline enlists ahead achieving the memory authority (Sujatha, 2012). On the arrival way from the memory authority, this information is communicated to the whole neighborhood arbiter. Double pipeline enrolls on the downstream way and upstream way. The upstream way is sufficient to conduct the basic way sufficiently precise for a 200 MHz.The few processor centers and a solitary memory controller have a many-to-one correspondence

stream in this NoC and it is sorted out as a tree (Kavitha and Palanisamy, 2012). Every processor center is associated through a standard interface, the open core protocol (OCP) to the network interface (NI). The read and compose exchanges are bolstered by the memory NoC (Palanivel Rajan & Vivek, 2016). For individual word/byte composes, compose empower signals for individual bytes are bolstered. The DRAM device with an outside memory that requirements reviving, an invigorate circuit is combined to the memory NoC at an indistinguishable matched from a processor center (Kavitha and Palanisamy, 2013).

On Chip Signal Transmission: SoC wires are the physical acknowledgment of correspondence channel and, for our motivations, transports work as wire troupes. A few physical plan instruments to bolster robotized on-chip wiring has brought about the business improvement. By and by, adapting to worldwide wires that traverse noteworthy separations, for example, those past one millimetre, requires an outlook change. Probably, the invert scaled worldwide wires give the innovation since it put on the highest point of the metal layers. Wiring pitch and width wires at high profile can be great more extensive and broader than low-level wires and its expansion in higher wiring levels. Expanded width lessens wire resistance, notwithstanding seeing the skin impact, although expanding separating around the wire forestalls capacitance development (Sridevi, 2016).

In the meantime, the resistance and capacitance expanded relies on upon the inductance impact. Thus, future worldwide wires will work as lossy transportation lines, rather than todays lumped or circulated resistance-capacitance models. Moreover the voltage swing diminished in fast correspondence and it likewise beneficially affects control dispersal. The watchful recipient outline, with better adjustment to line impedance and high-affectability detecting, perhaps with the assistance of sense speakers in decreased swing and current-mode transmission (Palanivel Rajan & Dinesh, 2015). On-chip data Ensuring error free data exchange at the physical level of worldwide on-chip wires will turn out to be more troublesome for a few reasons and when utilizing current innovations, most chip designers expect that electrical waveforms dependably convey redress On-chip information. Signal swings will be diminished and noise because of crosstalk, electromagnetic obstruction, and different components will have expanded effect. In this way, it will not be conceivable to digest the physical layer of on-chip arranges as a completely solid, settled postpone channel. At the smaller scale arrange stack layers stop the physical layer, noise is a wellspring of neighborhood transient breakdowns. A bombshell is the deliberation of such glitches. Vexed likelihood can change over various physical channels and after some time.

Table.1. Comparison of Literature Review

Existing Methodology	Advantage	Disadvantage
Network on Chip (Vivek & Palanivel Rajan, 2016)	It is used real time communication.	It only applies to networks with constant delay link.
Time Triggered Communication in NoC (Palanivel Rajan & Paranthaman, 2016)	Isolate messages in the spatial space, so messages can have a similar time-slot	Variation in power.
NoC Services (Renuka & Kavitha, 2013)	Configuration stream offer versatility, on the physical, architectural.	It does not exploit the support for multiple use-cases.
Time-Predictable Memory Network-on-Chip (Wolkotte, 2005)	The memory NoC underpins burst read and compose exchanges.	The memory NoC does not alter any memory activity.
On-Chip Signal Transmission (Mohanapriya & Vadivel, 2013)	On-chip systems enhance the obligation element of wires.	New flow control methods are required.

2. CONCLUSION

We imitated the execution of Way blockage mindful directing and Argo on Quartus II stage in this paper. The paper expanded past work on synchronous and mesochronous TDM-based NOCs by investigating the utilization of asynchronous routers that permit a really GALS style execution of a NOC-based multi-center stage. We looked at the execution of these two steering strategies regarding number of assets used, throughput, territory, power and delay. Path blockage mindful steering uses more silicon region and it devours more assets. Argo has a high clock recurrence than, the path blockage mindful directing, which implies Argo could prepare information all the more rapidly. The dependability of NoC router joins enhanced by the utilization of the novel fault-tolerant technique.

REFERENCES

Kavitha V, Palanisamy V, A Performance Analysis of Load Balanced Deflection Routing with Priority Scheduling in OBS Networks, International Journal of Engineering Science and Technology, 5 (4S), 2013, 1-8.

Kavitha V, Palanisamy V, Simultaneous Multi-path Transmission for Burst Loss Recovery in Optical Burst Switching Networks, European Journal of Scientific Research, 87 (3), 2012, 412-416.

Mohanapriya S, Vadivel M, Automatic retrieval of MRI brain image using multi queries system, International Conference on Information Communication and Embedded Systems (ICICES), 2013, 1099-1103.

Palanivel Rajan S, A Significant and Vital Glance on Stress and Fitness Monitoring Embedded on a Modern Telematics Platform, Telemedicine and e-Health Journal, 20 (8), 2014, 757-758.

Palanivel Rajan S, Cellular Phone based Biomedical System for Health Care, IEEE Digital Library Xplore**,** 2010, 550-553.

Palanivel Rajan S, Dinesh T, Analysis of Human Brain Disorders for Effectual Hippocampus Surveillance, International Journal of Modern Sciences and Engineering Technology, 2 (2), 2015, 38-45.

Palanivel Rajan S, Dinesh T, Systematic Review on Wearable Driver Vigilance System with Future Research Directions, International Journal of Applied Engineering Research, 10 (1), 2015, 627- 632.

Palanivel Rajan S, Intelligent Wireless Mobile Patient Monitoring System, IEEE Digital Library Xplore, 2010, 540-543.

Palanivel Rajan S, Paranthaman M, Vivek C, Design and Enhancement of Wideband Reconfigurability using Two E-Shaped Patch Antenna, Asian Journal of Research in Social Sciences and Humanities, 6 (9), 2016, 317-327.

Palanivel Rajan S, Performance Evaluation of Mobile Phone Radiation Minimization through Characteristic Impedance Measurement for Health-Care Applications, IEEE Digital Library Xplore, 2012.

Palanivel Rajan S, Review and Investigations on Future Research Directions of Mobile Based Telecare System for Cardiac Surveillance, Journal of Applied Research and Technology, 13 (4), 2015, 454- 460.

Palanivel Rajan S, Sheik Davood K, Performance Evaluation on Automatic Follicles Detection in the Ovary, International Journal of Applied Engineering Research, 10 (55), 2015, 1-5.

Palanivel Rajan S, Sukanesh R, Experimental Studies on Intelligent, Wearable and Automated Wireless Mobile Tele-Alert System for Continuous Cardiac Surveillance, Journal of Applied Research and Technology, 11 (1), 2013, 133-143.

Palanivel Rajan S, Sukanesh R, Performance Analysis Of Mobile Phone Radiation Minimization Through Characteristic Impedance Measurement, International Journal of Computer Science Issues, 9 (2), 2012, 540.

Palanivel Rajan S, Sukanesh R, Viable Investigations and Real Time Recitation of Enhanced ECG Based Cardiac Tele-Monitoring System for Home-Care Applications: A Systematic Evaluation, Telemedicine and e-Health Journal, 19 (4), 2013, 278-286.

Palanivel Rajan S, Sukanesh R, Vijayprasath S, Analysis and Effective Implementation of Mobile Based Tele-Alert System for Enhancing Remote Health-Care Scenario, Health MED Journal, 6 (7), 2012, 2370–2377.

Palanivel Rajan S, Sukanesh R, Vijayprasath S, Design and Development of Mobile Based Smart Tele-Health Care System for Remote Patients, European Journal of Scientific Research, 70 (1), 2012, 148-158.

Palanivel Rajan S, Vivek C, Blending Augmented Reality and Cloud - Need of the hour and an innovative approach, Journal of Chemical and Pharmaceutical Sciences, Special Issue 8, 2016, 23-27.

Renuka R, Kavitha V, An Energy Model for achieving High Performance Burst Transmission in OBCS Networks, International Journal of Engineering Science and Technology, 5 (4S), 2013, 7-13.

Renuka R, Kavitha V, OBCS: High performance burst transmission for achieving energy consumption, International Conference on Emerging Trends in Computing, Communication and Nanotechnology, IEEE, 2013, 410-414.

Sridevi A, PrasannaVenkatesan G.K.D, A Survey of PAPR Reduction in OFDM Signals, Journal of Advances in Chemistry, 12 (23), 2016, 5478-5483.

Sujatha K, Nandagopal C, Realization of gateway relocation using admission control algorithm in mobile WIMAX networks, 4th IEEE International Conference on Advanced Computing (ICoAC), 2012, 1-5.

Sundaravadivu K and Bharathi S, STBC codes for generalized spatial modulation in MIMO systems, IEEE International Conference on Emerging Trends in Computing, Communication and Nanotechnology (ICECCN), Tirunelveli, 2013, 486-490.

Vijayprasath S, Palanivel Rajan S, Performance Investigation of an Implicit Instrumentation Tool for Deadened Patients Using Common Eye Developments as a Paradigm, International Journal of Applied Engineering Research, 10 (1), 2015, 925-929.

Vivek C, Palanivel Rajan S, Kavitha V, Implementation of High Speed Area Efficient Variable Latency Adder, Asian Journal of Research in Social Sciences and Humanities, 6 (9), 2016, 306-316.

Vivek C, Palanivel Rajan S, Review of Low Power and High Speed Implementation of 3-bit Flash Analog to Digital Converter, Journal of Chemical and Pharmaceutical Sciences, Special Issue 8, 2016, 74-78.

Vivek C, Palanivel Rajan S, Z-TCAM: An Efficient Memory Architecture Based TCAM, Asian Journal of Information Technology, 15 (3), 2016, 448-454.

Wolkotte P.T, Smit G.J.M, Rauwerda G.K, and Smit L.T, An energy-efficient reconfigurable circuit-switched network-on-chip, in Proc. 19th IEEE Int. Parallel Distrib. Process. Symp, (IPDPS), 2005, 155a.